NAPETOST / VOLTAGE	120 V
FREKVENCA / FREQUENCY	60 Hz
NAZIVNA MOČ / NOMINAL POWER	1150 W

DVOJNA IZOLACIJA
DOUBLE INSULATED

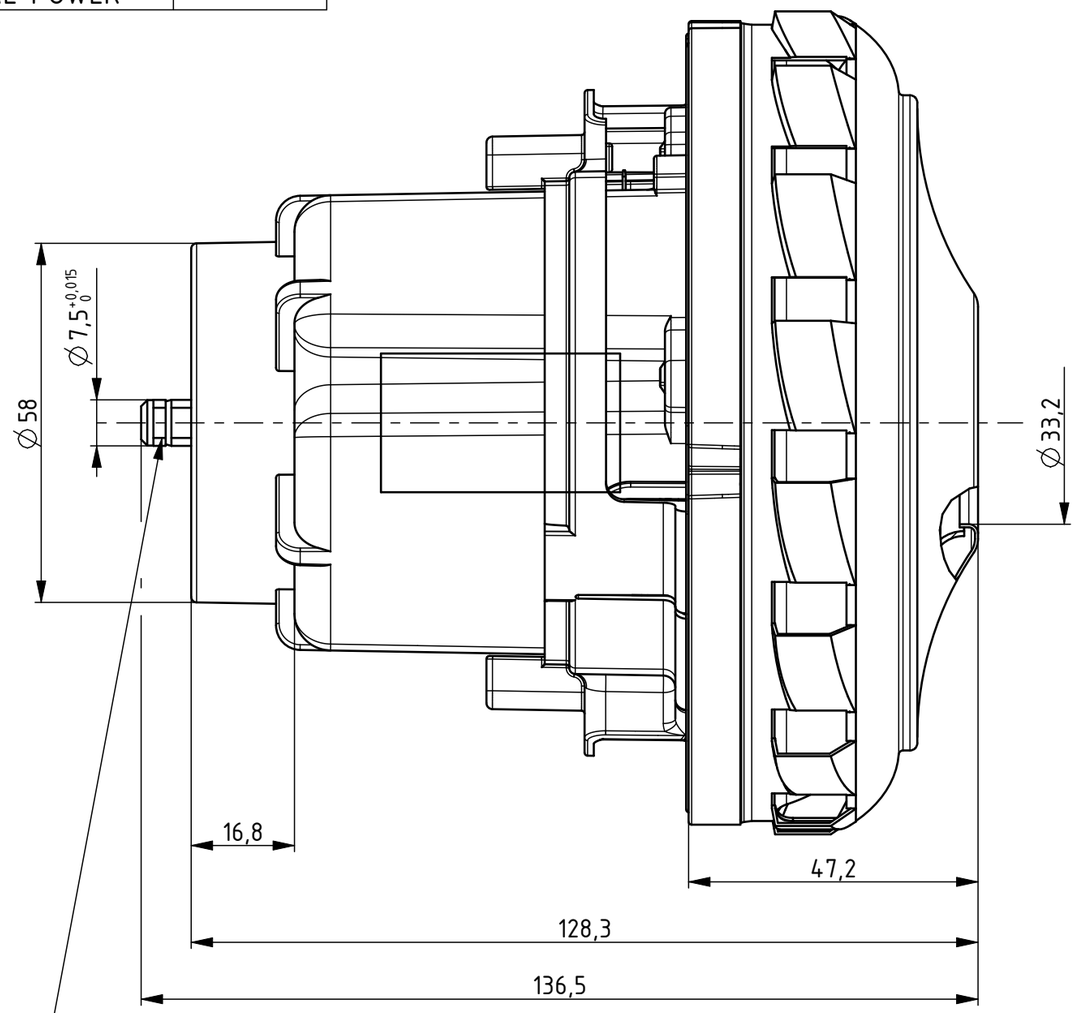

Mera preko kordelov
Dimension over knurls
7.6+0.05

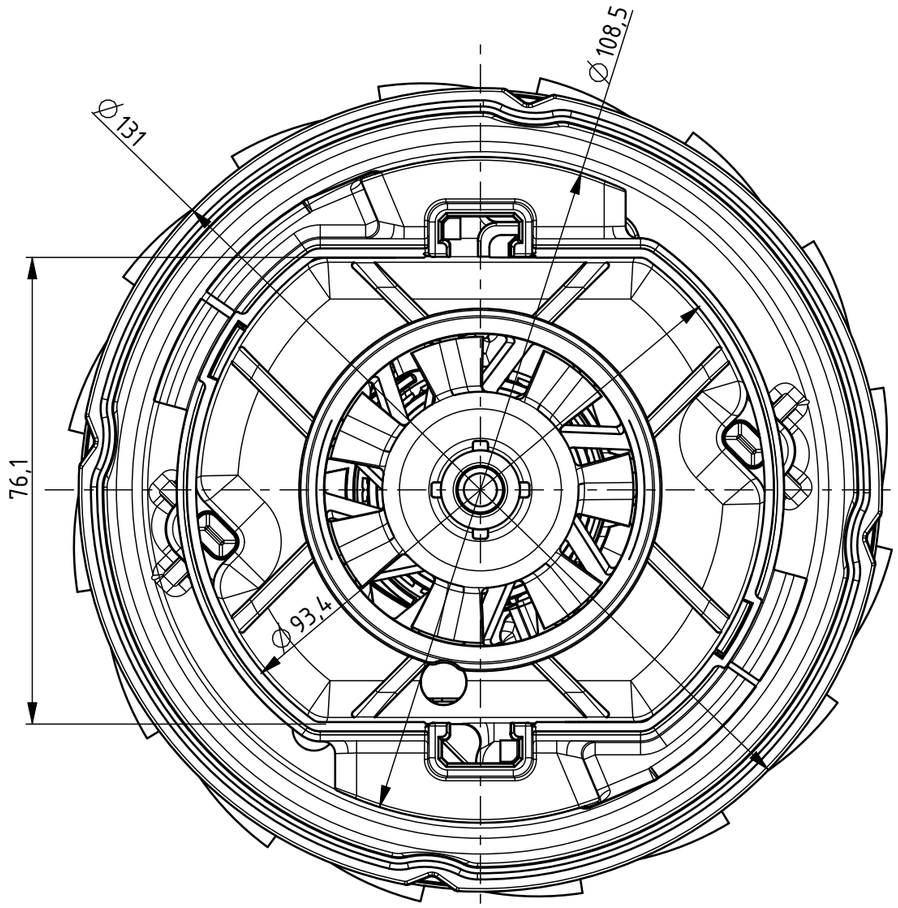

F2 Opombe:
DMC koda / DMC code:
!MN00476523!DAYYYYMMDD!SN0112760000!SX251569!

Oznake natisnjene na SE:
Information stamped on VCM:

DOMEL 467.3.411
476523
120 V 60 Hz
A0
YYWWD S NNNN
MADE IN SLOVENIA

F1

OSNOVNE ZNAČILNOSTI		TYPICAL CHARACTERISTICS	
IZVEDBA	ENOSTOPENJSKA	FAN SYSTEM	SINGLE STAGE
VLEŽAJENJE	DVA KROGLIČNA LEŽAJA	BEARINGS	DUAL BALL
VRSTA PRETOKA	MIMO MOTORJA	DISCHARGE	BY PASS
SMER VRTENJA	DESNA	DIRECTION OF ROTATION	CW

Ozn. Mark	Št. obvestila Nr. of notice	Datum Date	Ime Name
F2	13864	16.11.18	D. Vrhunc
E1	13175	05.09.17	D. Vrhunc
D2	10194	22.02.12	Novinc M.
C2	9056	14.07.09	Novinc M.
B1	8764	27.01.09	Novinc M.
A0	8725	11.09.08	Novinc M.

Tolerance odprtih mer / Tolerances without individual indications: ISO 8015, ISO 2768 – mK

Površinska hrapavost / Surface finishing

	Datum/Date	Ime/Name
Izdelal / Designed	05.09.08	Novinc M.
Pregl. / Verified	16.11.18	B. Benedik

DOMEL®
Otoki 21, 4228 Železniki, Slovenija

Merilo / Scale: 1:2

Original format: ISO 5457 – A3

Gradivo / Material

Naziv / Title: SESALNA ENOTA
VACUUM CLEANER MOTOR

Koda / Code: 467.3.411

List / Sheet: 3+

Stran / Page: 1

4673411000_SESALNA_ENOTA

Verzija

Status

Izdelano s CAD/ProEngineer - ročno spreminjanje ni dovoljeno! Vsak prenos tretjim osebam ali uporaba v nedogovorjene namene ni dovoljena po zakonu o avtorskih pravicah.
Made with CAD/ProEngineer - changing is not allowed! Any unauthorized copying of this drawing or unauthorized distribution of the information contained herein is prohibited.